CORNER STEP

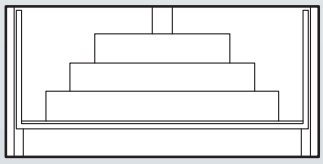

FRONT ELEVATION

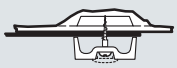

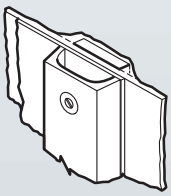

Detail of Liner
Fixing Strip

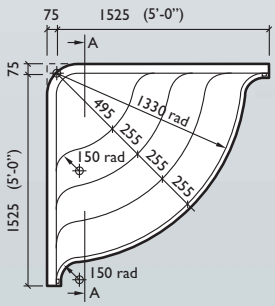

PLAN

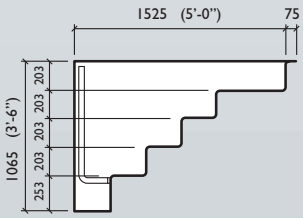

SECTION 'A-A'

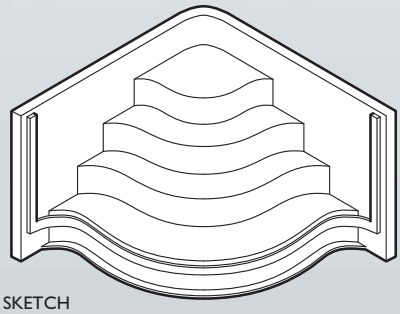

SKETCH

5' x 4' Constant Depth Corner Step

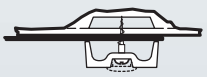

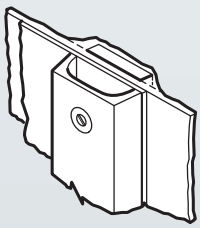

Detail of Liner Fixing Strip

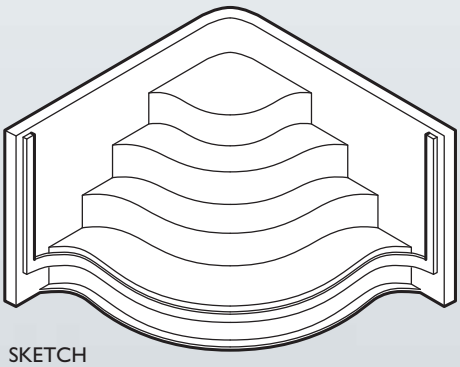

SKETCH

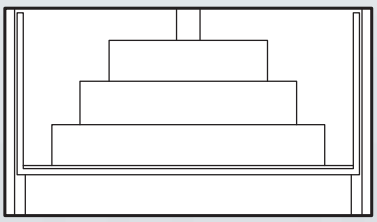

FRONT ELEVATION

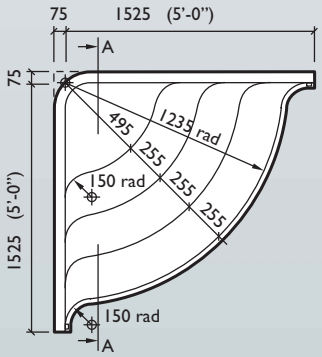

PLAN

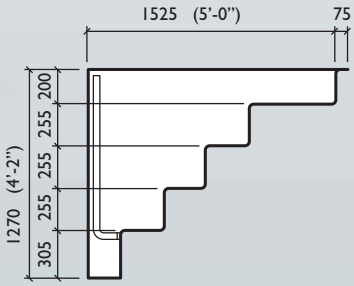

SECTION 'A-A'