# 12' x 4' Constant Depth Roman End Step – 3.66m x 1.22m

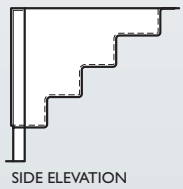

SIDE ELEVATION

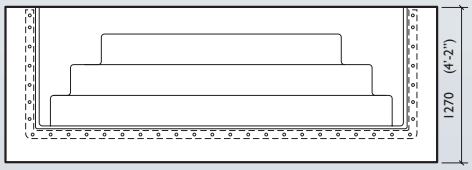


FRONT ELEVATION

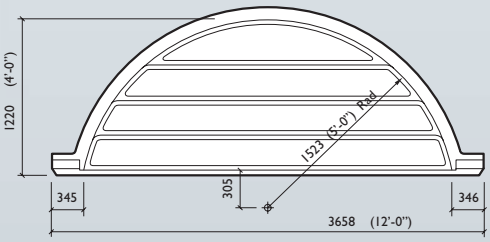


PLAN

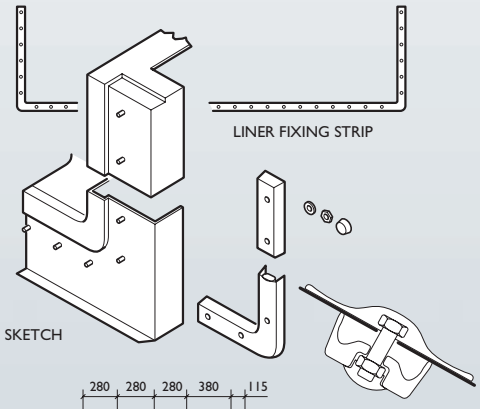

SKETCH

LINER FIXING STRIP

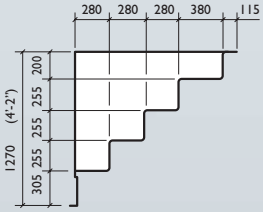


SECTION